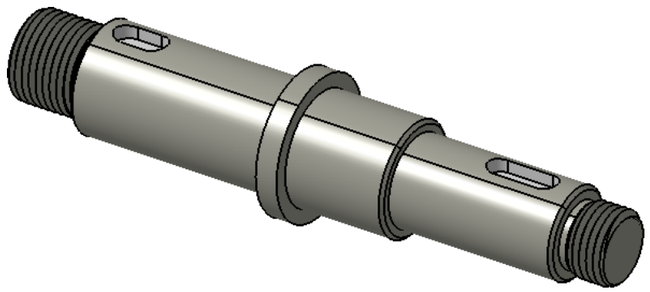

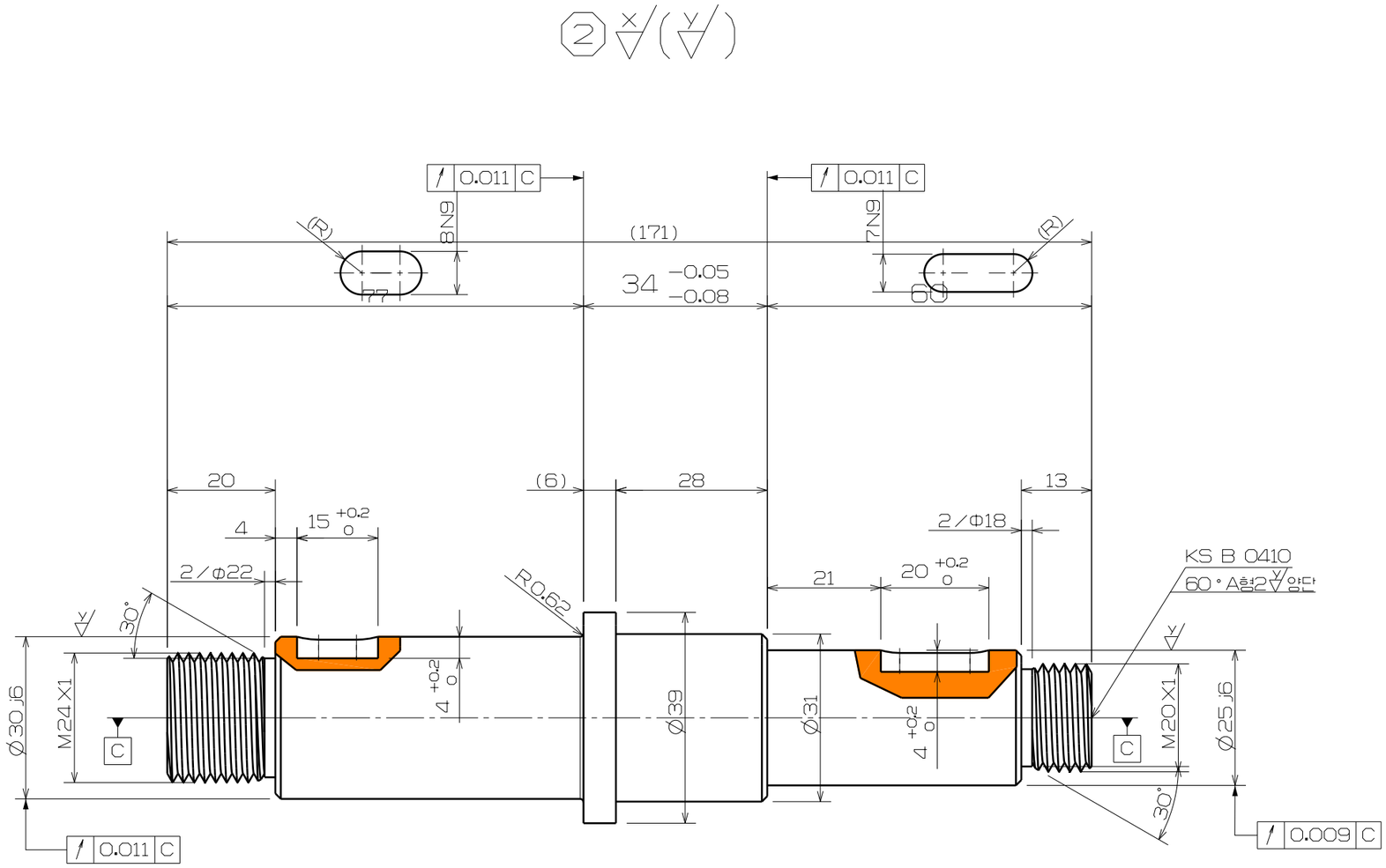

www.edu-catia.com